Analog control kit KIT_600W_LLC_AN_CTRL

from **digital** to **analog** control

for EVAL_600W_12V_LLC Evaluation boards

Di Domenico Francesco (IFAT PMM ACDC AE)
Zechner Florian (IFAT PMM ACDC AE)

Analog control kit KIT_600W_LLC_AN_CTRL for EVAL_600W_12V_LLC



Ordering code:
KIT_600W_LLC_AN_CTRL

This adapter kit is intended for use when replacing an digital control card with its analog alternative. The kit offers as a replacement option Infineon's LLC Resonant mode Controller ICE2HS01G .

Board components

› LLC Resonant mode Controller ICE2HS01G

To be used with the following boards

› EVAL_600W_12V_LLC_C7
› EVAL_600W_12V_LLC_P7

Copyright © Infineon Technologies AG 2017. All rights reserved.

Product Features

ICE2HS01G

- Resonant mode controller for Half-bridge LLC resonant converter with synchronous rectification drives
- 20-pin DSO package
- 30kHz to 1MHz switching frequency
- Adjustable minimum switching frequency with high accuracy
- 50% duty cycle for both primary and secondary gate drives
- Adjustable dead time with high accuracy
- Driving signal for synchronous rectification which support full operation of Half-bridge LLC resonant converter
- Internal and External disable function for synchronous rectification
- Mains input under voltage protection with adjustable hysteresis
- Three levels of overcurrent protection for enhanced dynamic performance
- Open-loop/over load protection with adjustable blanking time and restart time
- Adjustable over-temperature protection with latch-off
- External latch-off enable pin



Copyright © Infineon Technologies AG 2017. All rights reserved.

Bill of material (rework on mainboard)

Part	Value	Pieces	Tolerance	Device	Assembling info.	Manufacturer
C3	470n/50V	1		C-EU_C0805*	Replace with 470n/50V	
R19	4K3	1	±1%	R-EU_R0805 *	Replace with 4K3	
R20	4K3	1	±1%	R-EU_R0805 *	Replace with 4K3	
R36	56R	1		R-EU_R0805 *	Assemble 56R	
IC1	Board	1		KIT_600W_LLC_AN_CTRL		**Infineon**

* All needed replacement material is included in the KIT.

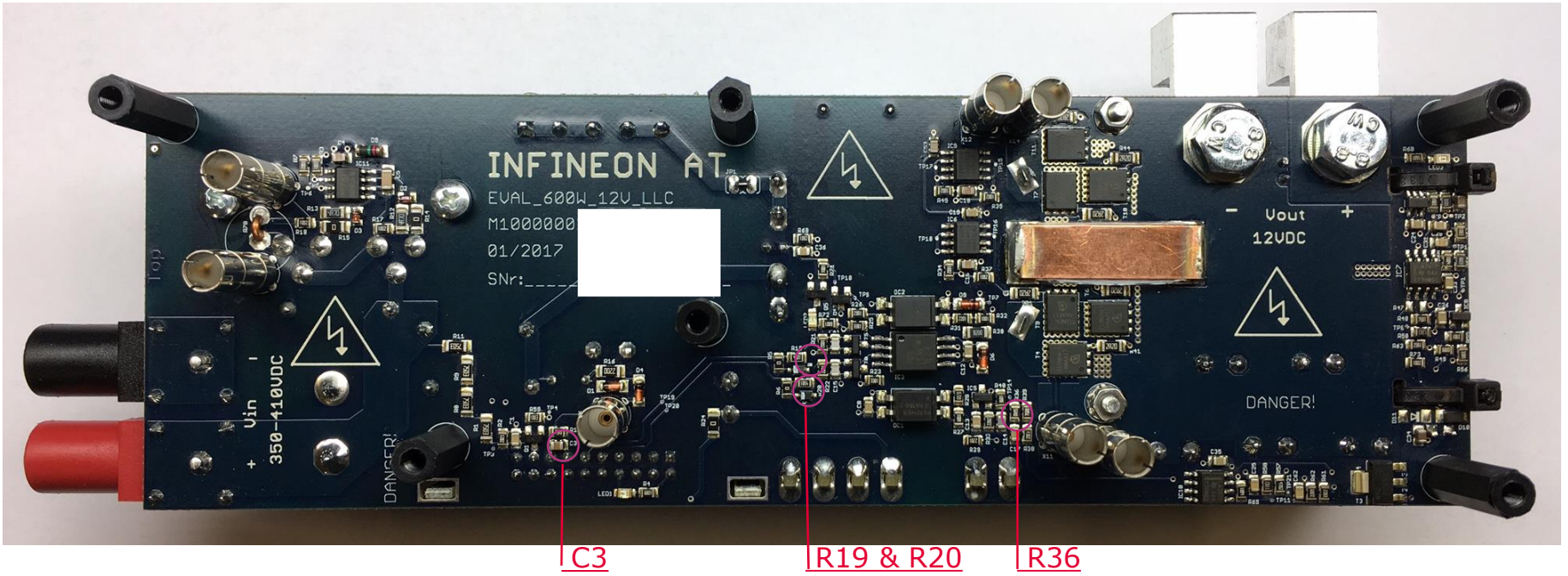

Copyright © Infineon Technologies AG 2017. All rights reserved.

Schematic

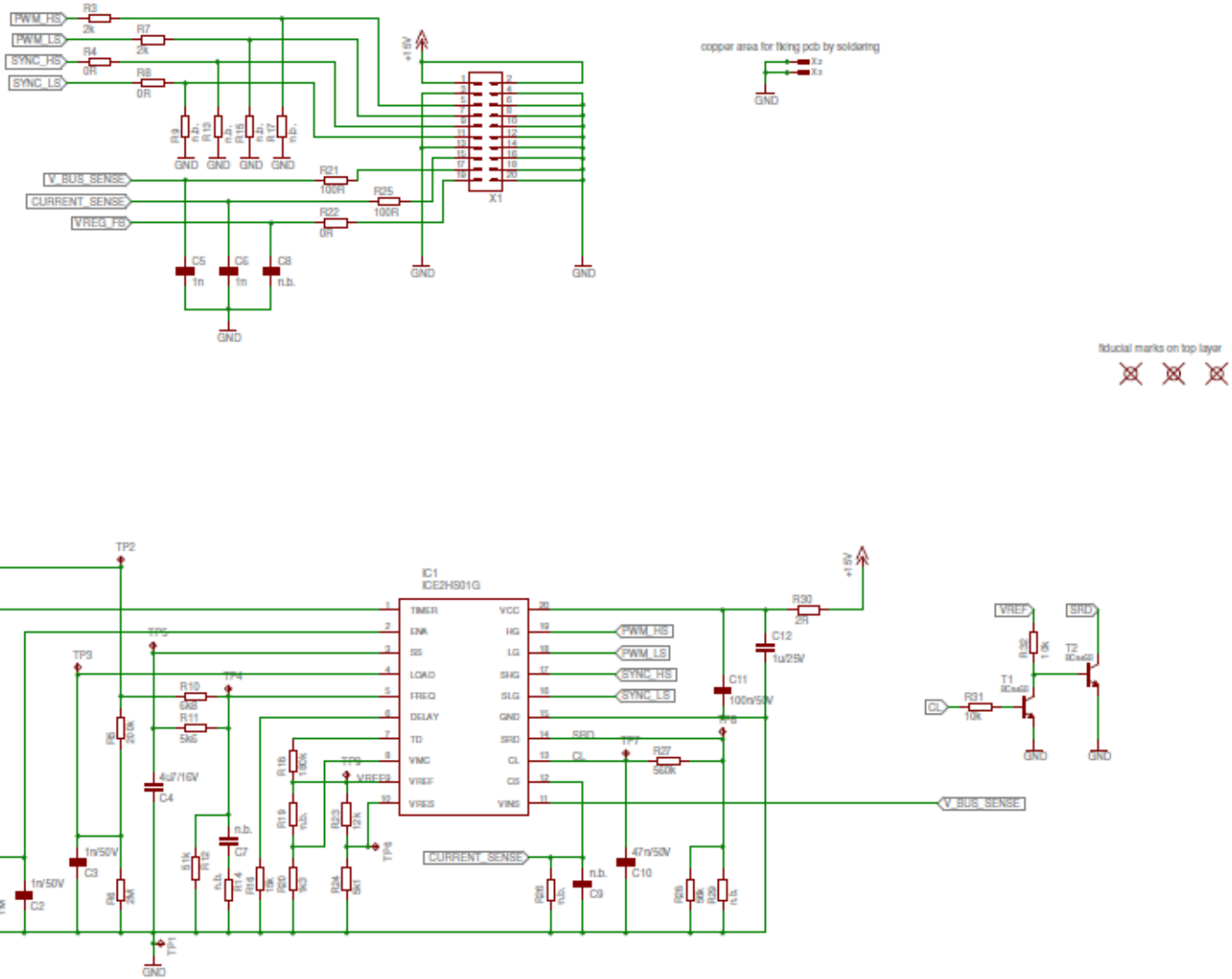

Copyright © Infineon Technologies AG 2017. All rights reserved.

Base Board EVAL_600W_12V_LLC_xx showing analog & digital control card

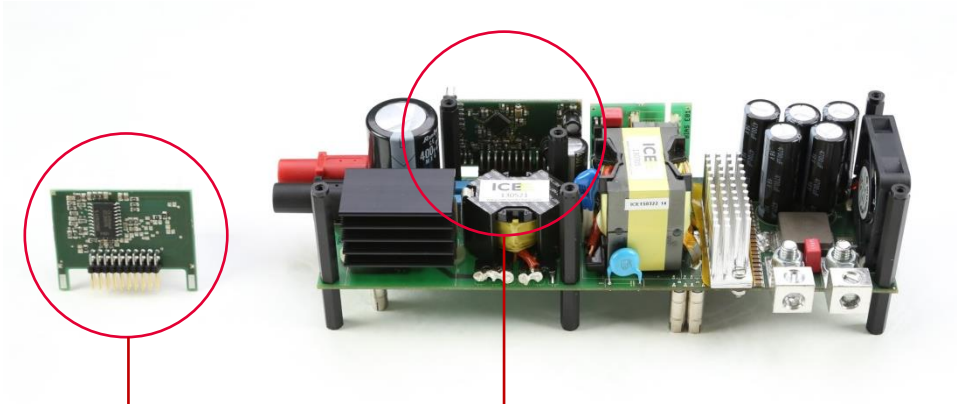

Digital Controlcard
KIT_600W_LLC_DI_CTRL

Analog Controlcard
KIT_600W_LLC_AN_CTRL

Ordering code:
EVAL_600W_12V_LLC_C7
EVAL_600W_12V_LLC_P7

Infineon's 600W 12V LLC Boards showcase how to design a half-bridge LLC stage of a server SMPS with the target to meet 80+ Titanium standard efficiency requirements. The **KIT_600W_LLC_AN_CTRL** can be used with any of Infineon's EVAL_600W_12V_LLC Boards, replacing the digital control card.

Application note:

- Evaluation Board EVAL_600W_12V_LLC_C7_d with 600V CoolMOS™ C7
- Evaluation Boad EVAL_600W_12V_LLC_P7 with 600V CoolMOS™ P7

www.infineon.com/600W-LLC-eval

Copyright © Infineon Technologies AG 2017. All rights reserved.

Support



Technical Material	› Application Notes › Simulation Models › Datasheets › PCB Design Data	› www.infineon.com/600W-LLC-eval › www.infineon.com/KIT_600W_LLC_AN_CTRL
Evaluation Boards	› Evaluation Boards › Demoboards › Reference Designs	› www.infineon.com/evaluationboards
Videos	› Technical Videos › Product Information Videos	› www.infineon.com/mediacenter

Copyright © Infineon Technologies AG 2017. All rights reserved.



Part of your life. Part of tomorrow.

Infineon